General Tolerances/Allg.Toleranzen DIN ISO2768-mk				
0.5≤3 ±0.1	>3≤6 ±0.1	>6≤30 ±0.2	>30≤120 ±0.3	>120≤400 ±0.5

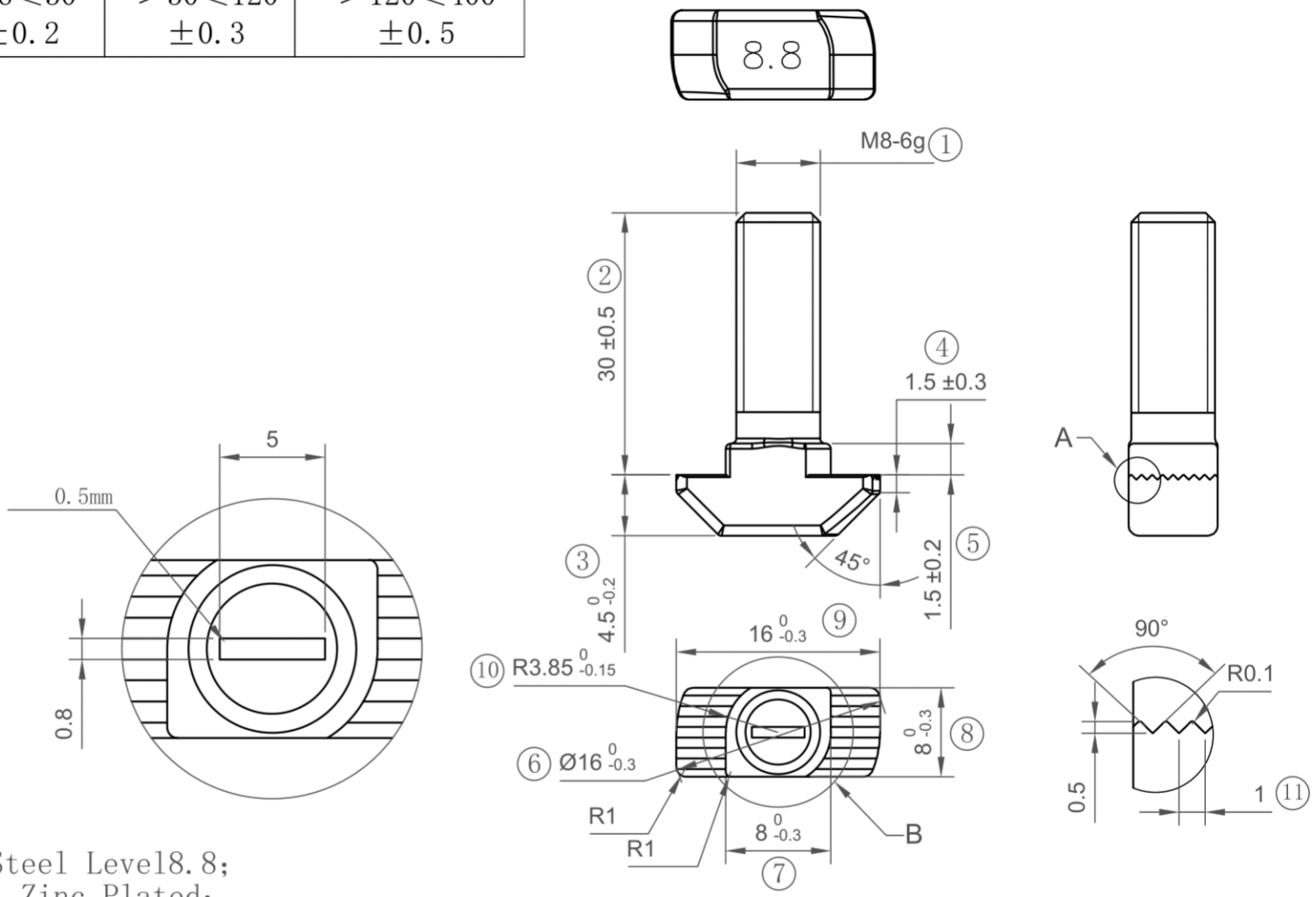

1. Material: Carbon Steel Level8.8;
2. Surface treatment: Zinc Plated;
3. Appearance should be without lack materials, smudge and burs;
4. Unspecified length tolerance according to 2768-M intermediate tolerance